ARMSTRONG®

E S P U M P

SERIES 40PF

4 x 3 x 13 FM

DIESEL DRIVEN

FILE NO.:	F40.50
DATE:	November 22, 2001
SUPERSEDES:	F40.50
DATE:	January 15, 2001

SUBMITTAL

JOB: _____ REPRESENTATIVE: _____

ORDER NO: _____ DATE: _____

ENGINEER: _____ SUBMITTED BY: _____ DATE: _____

CONTRACTOR: _____ APPROVED BY: _____ DATE: _____

TAG/REF:								DWG# 1509C
PUMP DATA	FLOW	HEAD	ENGINE DATA	HP	RPM	BAT. VOLTAGE	TANK SIZE	OTHER

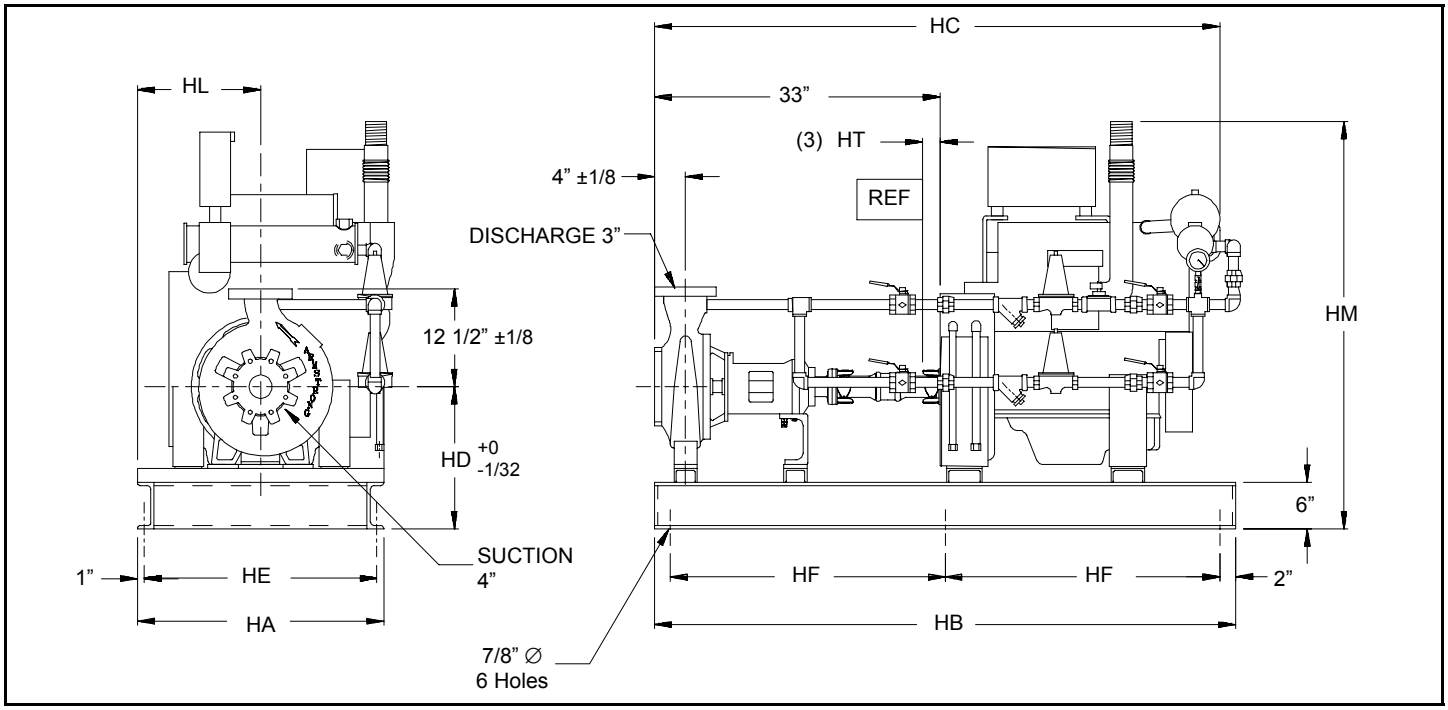

ENGINE	DIMENSIONS									WT
	HA	HE	HL	HB	HF	HD	HM(4)	HC(4)	HT	(LBS)
CLARKE VM MOTORI(VMFP) / JOHN DEERE										
JU4H-SERIES	32	30	16	82	39	22.50	55	70	-	935
VMFP-SERIES	24	21.5	12	86	34	16	55	86	-	1780

FLANGE RATING

☐ ANSI 125# STD (1)

☐ ANSI 125# SUCTION
250# DISCHARGE

☐ PN 16

FIRE PUMP LISTING

☐ UL

☐ ULC

☐ FM

NOTE:

(1) STD. DISCHARGE FLANGE THICKNESS ANSI 250#

(2) COUPLING GUARD NOT SHOWN

DO NOT USE FOR CONSTRUCTION UNLESS CERTIFIED

S.A. Armstrong Limited
23 Bertrand Avenue
Toronto, Ontario
Canada, M1L 2P3
Tel: (416) 755-2291
Fax: (416) 759-9101
Visit us at www.armstrongpumps.com

Armstrong Pumps Limited
Peartree Road, Stanway
Colchester, Essex
United Kingdom, C03 5JX
Tel: 01206-579491
Fax: 01206-760532

Armstrong Pumps Inc.
93 East Avenue
Buffalo, New York
U.S.A. 14120-6594
Tel: (716) 693-8813
Fax: (716) 693-8970

Armstrong Darling Inc.
2200 Place Transcanadienne
Montreal, Quebec
Canada, H9P 2X5
Tel: (514) 421-2424
Fax: (514) 421-2436

© S.A. Armstrong Limited 2001